MODELLBAHN DIGITAL PETER STÄRZ

Dresdener Str. 68 – D-02977 Hoyerswerda – ☎ 🖷 +49 3571 404027 – www.firma-staerz.de – info@firma-staerz.de

Module kit Businterface for Selectrix®

Businterface v1-2008

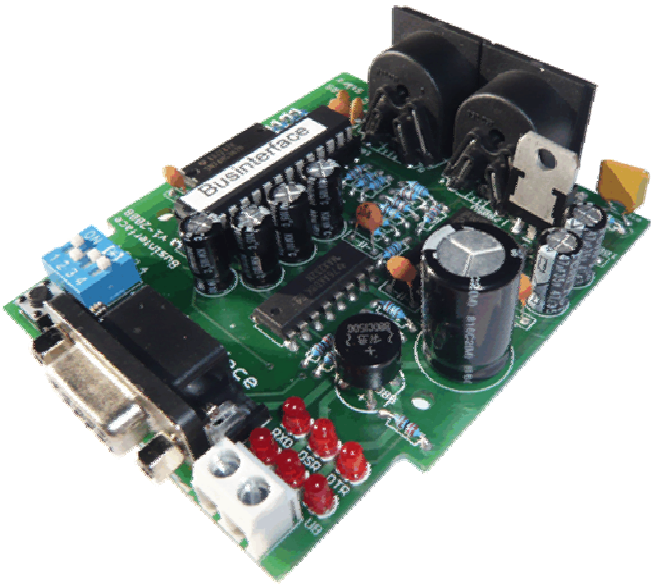

Degree of difficulty: easy **medium** difficult

Necessary skills:
- Extensive assembly and soldering of the PCB

The Businterface is a module for the creation of a Selectrix-Bus in combination with an integrated computer interface. The Businterface is the required component for digitally controlling a model railway layout's accessory modules via the SX-Bus in combination with a computer (using RS-232/COM) and an appropriate model railway controlling software (e.g. Win-Digipet or Railroad & Co.® TrainController™).

Special features

- Esecially for Selectrix®
- RS232-interface
- Overload predection of the SX-Bus (1,35A)

Table of content

Technical specifications

Size
71,7mm x 84,6mm x 20mm

Power supply
A suitable external power supply is required to feed the SX-Bus with signal current.

AC	12V - 15V, 1,35A; or
DC	15V - 20V, 1,35A

Overload predection of the SX-Bus at 1,35A.

Connectors
1x terminals for power supply
1x RS232 computer interface jack
2x SX-Bus jacks

Display
6x status LED

Interface data transfer rates (baud rates)
9600; 19200; 38400; 57600 Baud

Plugging
The Businterface is shipped with a computer interface cable to interconnect it to a computer.
Any SX-Bus module may be plugged to the SX-Bus jacks by an SX-bus cable.
The module must never be connected to the Selectrix-Power-Bus (PX-bus)!
Bus cables may only be plugged or unplugged at power down of the model railway layout.

Operating principle
The Businterface creates the Selectrix-bus signal and provides it at both SX-Bus jacks. Any further accessory modules (e.g. occupancy detectors or accessory decoders) for the Selectrix system can then be plugged and can be operated.
Additionally the Businterface communicates with the connected computer via the RS-232 (COM-) interface. A continuous data transfer between both interfaces ensures that changes of the SX-Bus are instantly transmitted to the computer and changes made via the computer (by a dedicated computer programme) are received and communicated to the SX-Bus by the Businterface.
For controlling the SX-Bus via the computer, an adequate model railway controlling programme is required.
The Businterface operates under the TRIX-Standard.

Assembly notes
The module is assembled following the instructions on the next page. For soldering the components on the PCB a soldering iron of 12 to 25 Watts or a soldering station with the temperate set to approx. 400℃ is needed together with 0.5 or 1.0 mm soldering wire with rosin flux. No special tools are required. Do not use soldering flux! Pay attention to solder speedy to avoid device damage by overheating.

Non-Use
When the module is not used it should be stored at a dry and clean place.

Please also visit our FAQ page at www.firma-staerz.de for any question first.

Kit contents

Please first verify that the kit contains all the components listed below.

General parts:
- 1x circuit board
- 1x voltage regulator 7805
- 1x rectifier B80C1500
- 1x PTC 1,35A
- 1x push button
- 1x 4-way DIP-switch
- 6x LEDs (red)
- 1x resistor network 22kOhm
- 4x screws
- 4x spacer rings
- 1x SX-Bus cable
- 1x RS-232 cable

Connectors:
- 2x SX-Bus jacks
- 1x 9-pinned RS232 jack
- 1x terminal 2-pinned

ICs:
- 1x 28-pin IC socket
- 1x PIC18F2420
- 1x IC MAX232
- 1x IC LM339
- 1x IC 74HC367

Transistors:
- 1x BC557B

Capacitors (Marking):
- 6x electrolytic 47µF
- 1x electrolytic 1000µF
- 6x ceramic 100nF
- 2x ceramic 220pF

Diodes (Marking):
- 1x BYW54

Resistors (Marking):

1x 47Ohm	(yellow, lilac, black, silver, brown)
2x 100Ohm	(brown, black, black, black, brown)
4x 220Ohm	(red, red, black, black, brown)
1x 470Ohm	(yellow, lilac, black, black, brown)
2x 1kOhm	(brown, black, black, brown, brown)
4x 2,2kOhm	(red, red, black, brown, brown)
4x 4,7kOhm	(yellow, lilac, black, brown, brown)
3x 10kOhm	(brown, black, black, red, brown)
5x 22kOhm	(red, red, black, red, brown)

Accessory and expendabilities

The following equipment is available:

Accessory:
- **USB-RS-232-Konverter: USB2-232** **Art. 217**

Housing:
- **Housing for Businterface: G 523 B** **Art. 177**

Assembly instruction

Assemble the kit in the order of these instructions. All components are placed on the top side of the PCB (marked “top”) as close to the PCB as possible and soldered on the bottom side of the PCB (marked “Bottom”). Use a bending tool (e.g. Conrad 425869 – 62) for bending. Cut the leads of components flush using a wire cutter after soldering.

Solder cleanly and precisely!

1. The wire bridge on the bottom side is left open!

2. Resistors

tate placing components on the PCB support the edges of the board with the help of two books, for instance, to leave enough space for the leads under the board. Insert the resistors on board aligning the coloured rings of all the resistors in the same way to make it easier to verify the value of the resistors later. Place a suitable plane piece of wood or similar on top of the resistors on board. Turn the board together with the wood upside down. The underside of the board is now conveniently accessible for soldering the components.

Solder one end of each resistor first and check that they are positioned properly before soldering the other end of each resistor.

R1-R4, R22:	22kOhm	(red, red, black, red, brown)
R6:	47Ohm	(yellow, lilac, black, silver, brown)
R5, R7:	100Ohm	(brown, black, black, black, brown)
R8-R9, R23:	10kOhm	(brown, black, black, red, brown)
R10-R13:	4,7kOhm	(yellow, lilac, black, brown, brown)
R16-R17:	1kOhm	(brown, black, black, brown, brown)
R18-R21:	2,2kOhm	(red, red, black, brown, brown)
R24-R27:	220Ohm	(red, red, black, black, brown)
R28:	470Ohm	(yellow, lilac, black, black, brown)

3. Diode D1

The diode is placed with its cathode facing towards the voltage regulator IC2_BI. The cathode is marked with a stripe.

4. Socket for PIC, ICs

Place and solder the PIC socket and ICs with the notches according to the component layout diagram on the PCB.

IC3:	LM339N
IC4:	MAX232
IC5:	74HC367N
Sockel:	Socket for IC1

5. Resistor network RN1

Place the resistor networks according to their marking: the marking has to face to the IC1 socket.

22kOhm: RN1 (9x-1-223)

6. Push button

SW2: Place and solder the push button accordingly

7. LEDs H3-H8

The cathode of the LED is to be placed to face the terminals. The shorter lead of the LED is the cathode and the collar is also flat on the cathode side.

8. DIP-switch SW1

The DIP-switch is placed according to the marking. The label “ON” has to face to the inner of the PCB.

9. Terminals, Transistor T1 and rectifier B1

Solder the terminals first. The rectifier should be soldered in the same height as the terminals. Especially take care for the polarity: The positive pole has to face to resistor R19. Place the transistor T1 accordingly.

10. Ceramic capacitors

C1-C5, C13:	100nF	(104)
C14-C15:	220pF	(221)

11. RS232 jack, PTC

Solder the RS-232 jack accordingly. Then solder the PTC.

12. Electrolytic capacitors, Watch polarity!

C8-C11: 47µF: The negative pole must face to the SX-Bus jacks, the positive pole (longer lead) facing to the RS232 jack.

C6, C7: 47µF: The negative pole must face to the capacitor C2.

C12: 1000µF: **Solder this capacitor only after having soldered the SX-Bus jacks.** The positive pole must face to the outer side of the PCB.

13. Voltage regulator IC2

Only the voltage regulator IC2_BI (7805V) is populated, the metallic side facing to IC2_I. IC2_I itself is not populated.

14. SX-Bus jacks

Solder the shielding (big pads) of the jacks generously.

15. Verification and mounting the PIC

After soldering all components on the PCB verify once more that they are placed according component layout diagram and that they are oriented properly. Check that all solder points on the bottom side of the PCB look correct. Note especially if there are any undesired solder bridges between solder pads.

After the verification the PIC can be mounted:

Component layout diagram on the PCB

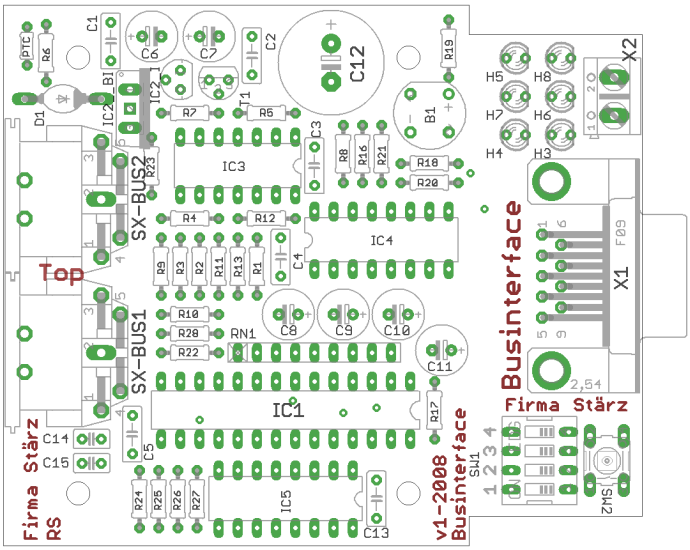

Populated PCB

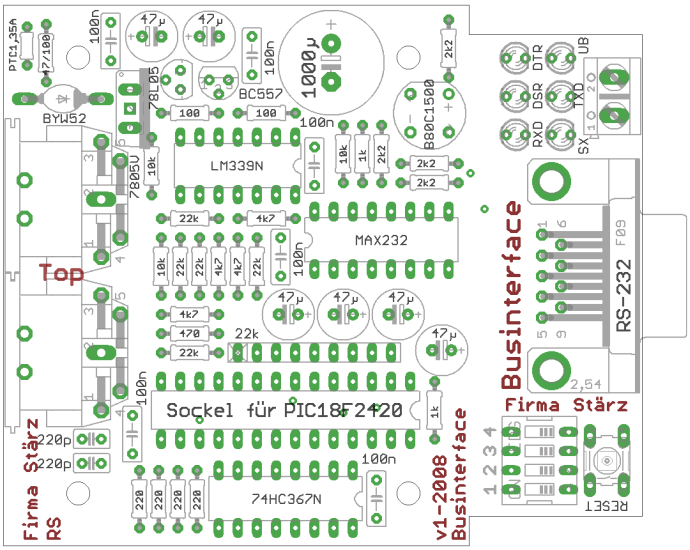

Description of operation

Power supply and wiring

The Businterface must be powered by an external power supply (AC: 12V - 15V or DC: 15V - 20V; 1,35A).

Bringing into service as Businterface

At first, select the data transfer rate of the integrated computer interface via DIP-switches 1 and 2 (see table). Select “TRIX-Standard” in your model railway controlling software as interface setting and select the same settings for the data transfer rate as selected by the DIP-switches.
Set DIP-switch 3 into position “ON”.
Finally, the Businterface is connected to the model railway layout SX-Bus via the SX-Bus calbe and to the computer using the RS-232 cable.

Bringing into service as interface

Proceed as when bringing into service as Businterface, but set DIP-switch 3 into position “OFF“.

Plugging to SX-Bus

The module is connected to the SX-data-bus via an (optional) SX-bus cable.
The module must never be connected to the Selectrix-Power-Bus (PX-bus)!
Bus cables may only be plugged or unplugged at power down of the model railway layout.

Plugging to RS-232

The RS-232 cable may be plugged or unplugged at any time, both in power down mode or in operation of the computer and the Bus-interface (while running the model railway layout).

Push button SW2

This push button resets the Businterface and initiates reboot. This function is not required during normal operation but offers additional backup. The Businterface automatically detects changes of the data transfer rate set with the DIP-switches during operation and reboots automatically.

DIP-switch

The first two DIP-switches set the data transfer rate of the Businterface (baud rate):

1 OFF	2 OFF	9600 Baud
1 ON	2 OFF	19200 Baud
1 OFF	2 ON	38400 Baud
1 ON	2 ON	57600 Baud

The setting of 19200 Baud is recommended.

DIP-switch 3

DIP-switch 3 turns on and off the creation of the SX-Bus: In position “OFF“, the SX-Bus is not created and the Businterface operates in interface only mode. Then another central unit (or equal) is required to generate it (refer to the connection scheme: a central unit in the red box is required).

DIP-switch 4

DIP-switch 4 activates the auto counter at the Selectrix-Address 111: In position “ON“, the Businterface writes an internal counter to that address which can be used as an additional feature to control if the Businterface is working properly. When observing address 111 with a computer programme or an adequate module at the SX-Bus, fast fluctuations indicate a properly working Businterface.
For normal operation this feature can be deactivated by turning the DIP-switch into position “OFF”.

Status LEDs

UB	Power supply indicator
SX	SX-Bus active and accessible
DSR	Control pins of the RS232 interface
DTR	Control pins of the RS232 interface
TXD	Data are being sent to the computer
RXD	Data are being received from the computer

Installation site

The module should be located in a dry, ventilated and clean area being easily accessible and lying beside or next to the model railway layout.
The module must be kept free of coarse dirt or electro conductive parts falling down.
The module may be arranged without a housing needed. In that case the module shall be put on an insulating sub floor by means of the plastic spacer rings and screws delivered.
Keep all electro conductive tools, assembly kits and cables away from the module during operation.
A negligently and by external circumstances caused short-circuit (impinging on the module from above or from the bottom) may destroy the module. If that happens, all terms of warranty will become invalid.

Maintenance and care

Dust clumping together can, in combination with condensating liquids, become conductive and deteriorate the functionality of the module. It is therefore important to remove dust regularly by blowing it off or vacuuming the module.
CAUTION: A liquid cleaning of the part is prohibited!

Connection scheme

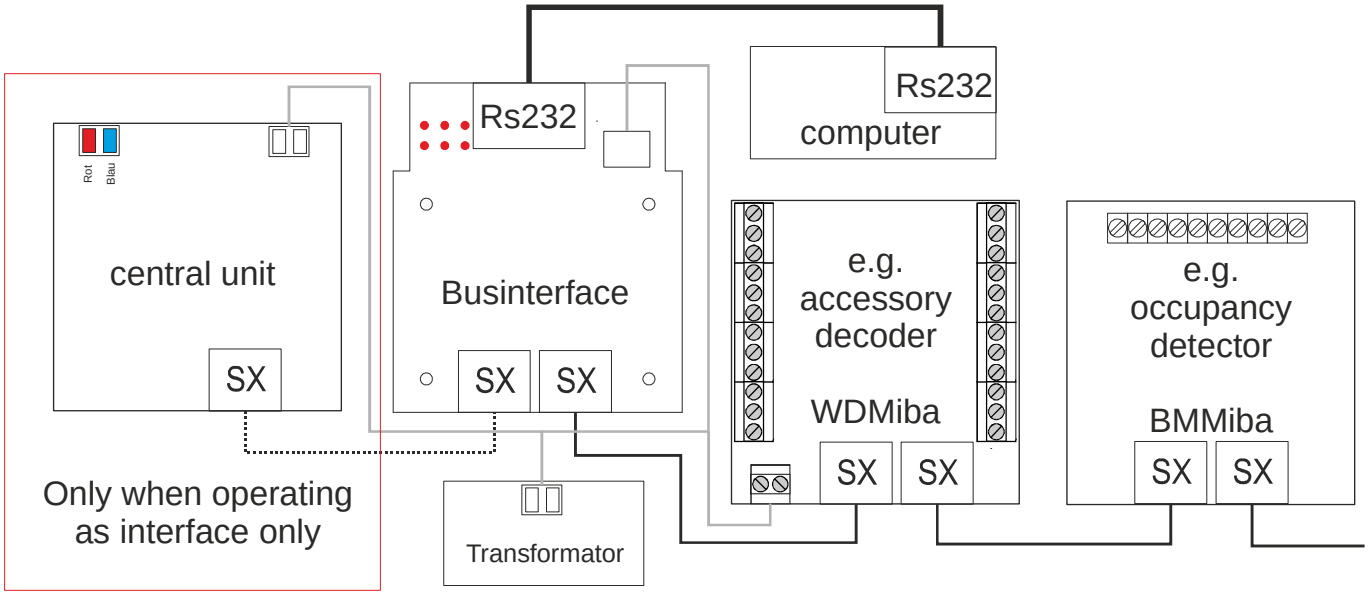

Modellbahn Digital Peter Stärz, Dresdener Str. 68, D-02977 Hoyerswerda

Printable version of 11.02.2013